hartmann APPLIANCES

OD0007

Built – in Electric Oven

User Manual

PDF compression, OCR, web optimization using a watermarked evaluation copy of CVISION PDFCompressor

Multi function Oven 3
Safety Instructions 4
General Warnings 4
Declaration of Compliance 4
Safety Hints 5
Installation 5
Fitting the Oven into the Kitchen Unit 6
Important 6
Connecting to the Power Supply 6
Useful Tips 7
Grilling 7
Cleaning and Maintenance 7
Operation Instructions 8
1. Clock Setting 8
2. Function Setting 8
3. Inquiring Function 9
4. Lock-out Function for Children 9
5. Reminding Function 9
6. Start/Pause/Cancel Function 9
7. Energy-saved Function 9
8. Specification 10
Care and Cleaning 10
Oven Exterior 10
Oven Door Cleaning 11
Replacing the Interior Light 11
Accessories 12
Installation 13
Ventilating Openings 13
Connections of the Oven 13
Tables and Tips 14
Tables and Tips 15

PDF compression, OCR, web optimization using a watermarked evaluation copy of CVISION PDFCompressor

MULTI FUNCTION OVEN

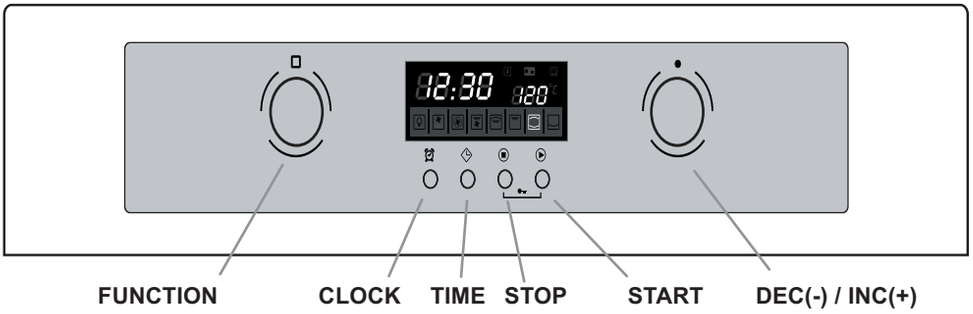

	Light:Top model have an extra light,so you can see what is going on without opening the door.
	Defrost: The room temperature air is driven by a powerful fan to circulate around the food. It's a gentle way to speed up the defrosting time of delicate foods as well as fish and poultry.
	Convection: The ring element around the fan produces hot air constantly, then the air is distributed throughout the oven to give a even temperature. It is an efficient and economical method, especially ideal for cooking on more than one shelf levels at the same time.
	Cycle grilling: Heat is produced by the grill element and directly delivered to the surface of the food, meanwhile the fan cycles the heat in the oven. This method can save up to 30-40% energy and give the result of even crispy. Ideal for meat and poultry to have a rotisserie result.
	Full surface grilling: The infrared element and top element work simultaneously to offer a full surface grilling, and the temperature is precisely controlled.
	Infrared grilling: Only the inner grill element cycles on and off to maintain the temperature. Ideal for small quantities or just centre surface of foods.
	Conventional heat: The top and bottom elements work together to provide conventional cooking method. Heat is transferred to the centre of the oven by natural conduction.
	Bottom heat: A concealed element in the floor of the oven provides more concentrative heat for the base of foods. Ideal for pizza base to have a crispy underside.

* Test in accordance with the CENELEC EN 50304.

** Test in accordance with the CENELEC EN 50304 used for definition of energy class.

PDF compression, OCR, web optimization using a watermarked evaluation copy of CVISION PDFCompressor

SAFETY INSTRUCTIONS

GENERAL WARNINGS:

Thank you for choosing one of our products. To get the most out of your oven we recommend that you:

- Read the notes in this manual carefully. It contains important instructions on how to install, use and service this oven safely.
- Keep this booklet in a safe place for easy future reference. When the oven is first switched on, it may give out acrid smelling fumes. This is because the bonding agent for insulating panels around the oven has been heated up for the first time.
- This is completely normal; if it does occur, you merely have to wait for the fumes to clear before putting the food into the oven.
- Do not allow children to go near the oven when it is hot, especially when the grill is on.
- Ensure that the appliance is switched off before replacing the lamp to avoid the possibility of electric shock.
- Accessible parts may become hot during use. Young children should be kept away.
- Steam cleaner is not to be used.
- Do not use harsh abrasive cleaners or sharp metal scrapers to clean the oven door glass since they can scratch the surface, which may result in shattering of the glass.
- During use, the appliance becomes hot. Care should be taken to avoid touching heating elements inside the oven.
- This appliance is not intended for use by persons (including children) with reduced physical, sensory or mental capabilities, or lack of experience and knowledge, unless they have been given supervision or instruction concerning use of the appliance by a person responsible for their safety.
- Children should be supervised to ensure that they do not play with the appliance.
- The means for disconnection must be incorporated in the fixed wiring in accordance with the wiring rules.
- Conductors of supply cords shall have a nominal cross-sectional area not less than 3G1.5mm2.

DECLARATION OF COMPLIANCE

CE

When you have unpacked the oven, make sure that it has not been damaged in any way. If you have any doubts at all, do not use it: contact a professionally qualified person. Keep packing materials such as plastic bags, polystyrene, or nails out of the reach of children because they are dangerous for children.

PDF compression, OCR, web optimization using a watermarked evaluation copy of CVISION PDFCompressor

SAFETY HINTS

- The oven must be used only for the purpose for which it was designed; it must only be used for cooking food. Any other use, e.g. as a form of heating, is an improper use of the oven and is therefore dangerous. The manufacturers cannot be held responsible for any damage caused by improper, incorrect or unreasonable use. When using any electrical appliance you must follow a few basic rules.
- Do not haul upon the power cable to remove the plug from the socket.
- Do not touch the oven with wet or damp hands or feet.
- Do not use the oven unless you are wearing something on your feet.
- Do not allow children or irresponsible people to use the oven unless they are carefully supervised.
- It is not generally a good idea to use adapters, multiple sockets for several plugs and cable extensions.
- If the oven breaks down or develops a fault, switch it off at the mains and do not touch it.
- If the cable is at all damaged it must be replaced promptly. When replacing the cable, follow these instructions. Remove the power cable and replace it with one of the H05RR-F, H05VV-F, and H05V2V2-F type (Plug is the customer's responsibility). The cable must be able to bear the electrical current required by the oven. Cable replacement must be carried out by properly qualified technicians. The earthling cable (yellow-green) must be 10 mm longer than the power cable.

If the above instructions are not adhered to the manufactures cannot guarantee the safety of the oven. Means for disconnection must be incorporated in the fixed wiring in accordance with the wiring rules.

INSTALLATION

Installation is the customer's responsibility. The manufacturers have no obligation to carry this out. If the assistance of the manufacturer is required to rectify faults arising from incorrect installation, this assistance is not covered by the guarantee. The installation for professionally qualified person must be followed. Incorrect installation may cause harm or injury to people, animals or belongings. The manufacturer cannot be held responsible for such harm or injury.

PDF compression, OCR, web optimization using a watermarked evaluation copy of CVISION PDFCompressor

FITTING THE OVEN INTO THE KITCHEN UNIT

Fit the oven into the space provided in the kitchen unit; it may be fitted underneath a work top or into an upright cupboard. Fix the oven in position by screwing into place, using the two fixing holes in the frame.

To locate the fixing holes, open the oven door and look inside. To allow adequate ventilation, the measurements and distances indicated in the diagram on page 13 must be adhered to when fixing the oven.

IMPORTANT

If the oven is to work properly, the kitchen housing must be suitable. The panels of the kitchen unit that are next to the oven must be made of a heat resistant material. Ensure that the glues of units that made of veneered wood can withstand temperatures of at least 120 ºC. Plastics or glues that cannot withstand such temperatures will melt and deform the unit, once the oven has been lodged inside the unit, the electrical parts must be completely insulated .This is a legal safety requirement. All guards must be firmly fixed into place so that it is impossible to remove them without using special tools.
Remove the back of the kitchen unit to ensure an adequate current of air circulates around the oven. The hob must have a rear gap of at least 45 mm.

CONNECTING TO THE POWER SUPPLY

An ON/OFF switch having a contact separation in all poles with a minimum distance of 3mm between contacts may also be connected to the power supply. The connections must take account of the current supplied and must comply with current legal requirements. The yellow-green earthling cable must not be governed by the ON/OFF switch. The socket or the ON/OFF switch used for connecting to the power supply must be easily accessible when the oven has been installed. Important: During installation, the power cable position must be taken account in. Avoid the temperature to be above 50 ºC at any point of the power cable. The oven complies with safety standards set by the regulatory bodies. The oven is safe to use only if it has been adequately earthed in compliance with current legal requirements on wiring safety. You must ensure that the oven has been adequately earthed.
The manufacturers cannot be held responsible for any harm or injury to persons, animals or belongings caused by failure to properly earth the oven.
WARNING: the voltage and the supply frequency are showed on the rating plate. The cabling and wiring system must be able to bear the maximum electric power required by the oven. This is indicated on the specifications plate. If you are in any doubt at all, use the services of a professionally qualified person.

PDF compression, OCR, web optimization using a watermarked evaluation copy of CVISION PDFCompressor

USEFUL TIPS

GRILLING

Grilling makes it possible to give food a rich brown color quickly. For browning we recommend that you insert the grill onto the fourth level, depending on the proportions of the food.

Almost all food can be cooked under the grill except for meat rolls. Meat and fish that are going to be grilled should first be lightly doused with oil.

CLEANING AND MAINTENANCE

- Never use a steam or high pressure spray to clean the appliance.
- Never use abrasive cleaners, wire wool or sharp objects to clean glass oven door.
- Clean the stainless steel and enameled surfaces with warm, soapy water or with suitable brand products. It is not recommended to use abrasive stuff to clean because it may damage surfaces and ruin the ovens appearance. It is very important to clean the oven each time after it is used. Melted fat is deposited on the sides of the oven during cooking. The next time after oven is used this fat could cause unpleasant odors and might even affect the success of the cooking. Use hot water and detergent to clean, rinse out thoroughly.
  Use detergents and abrasive metal pads like brillo pads for the stainless steel grills. The glass surfaces as the top, oven door and warming compartment door must be cleaned when they are cold. Damages by not adhering to above rules will not be covered by the guarantee.

This appliance is marked according to the European directive 2002 / 96 /EC on Waste Electrical and Electronic Equipment (WEEE). By ensuring this product is disposed of correctly. You will help prevent potential negative consequences for the environment and human health, which could otherwise be caused by inappropriate waste handling of this product .The symbol on the product indicates that this product may not be treated as household waste .Instead it shall be handed over to the applicable collection point for the recycling of electrical and electronic equipment. Disposal must be carried out in accordance with local environmental regulations for waste disposal. For more detailed information about treatment, recovery and recycling of this product, please contact your local city office, your household waste disposal service or the shop where you purchased the product.

PDF compression, OCR, web optimization using a watermarked evaluation copy of CVISION PDFCompressor

OPERATION INSTRUCTIONS

This oven uses modern electronic control to adjust cooking parameters to meet your needs better for cooking.

1. CLOCK SETTING

When the oven is electrified initially, "00:00" will display, buzzer will ring once. And the program will go into waiting state.

1) Press "◇", the hour figures will flash.

2) Turn "◯" to adjust the hour figures, the input time should be within 0--23.

3) Press "◇", the minute figures will flash.

4) Turn "◯" to adjust the minute figures, the input time should be within 0--59.

5) Press "◇" to finish clock setting. ":" will flash, and the time will light.
Note: The clock is 24 hour.

2. FUNCTION SETTING

1) Turn "◯" to choose the function you need.The related indicator will light.

2) Turn "◯" to adjust the temperature.

3)Press "▶" to confirm start cooking.

4) If step 2 ignored, Press "▶" to confirm start cooking directlyand the default time is 9 hours,the default temperaturewill display the samll LED.

NOTE:

1) the step quantities for the adjustment time of the coding switch are as follow:

0------0:30 min : 1 minute
0:30--9:00 hour : 5 minutes

2) the step quantities for the adjustment of temperature is 5 degrees.

3) turn "◯" to adjust the cooking time when cooking begins.Then press "▶" to start cooking.If "▶" not pressed in 3 seconds,the oven will turn back to the previous time to continue cooking.

4)turn" ◯ "to adjust the temperature when cooking begins.The related indicator will light.Then press"▶ "to start cooking.If "▶ " not pressed in 3seconds,the oven will turn back to the previous temperatrue to continue cooking.

PDF compression, OCR, web optimization using a watermarked evaluation copy of CVISION PDFCompressor

3. INQUIRING FUNCTION

(1) Clock Inquiring
a. In cooking state, press "◇" to inquire the current time.

b. When the clock has been set, press "◇" to inquire the surplus cooking time.

4. LOCK-OUT FUNCTION FOR CHILDREN

Lock: In waiting state, press "⊡ " and " ▶ " simultaneously for 3 seconds, there will be a long “beep” denoting entering into the children-lock state and "🔑" indicator will light.
Lock quitting: In locked state, press" ⊡ " and " ▶" simultaneously for 3 seconds, there will be a long "beep" denoting that the lock is released.

5. REMINDING FUNCTION

1) In waiting state, press " ⏰ ", the hour figure flash.

2) Turn "◎" to adjust the hour figures, the input time should be within 0-- 9.

3) Press " ⏰ ", the minute figures will flash.

4) Turn "◎" to adjust the minute figures, the input time should be within 0--59.

5) Press " ▶" to finish clock setting. ":" will flash, and the time will light.

6. START/PAUSE/CANCEL FUNCTION

1) If the cooking time has been set, press " ▶" to start cooking.
If the cooking is paused, press " ▶ " to resume cooking.

2) During cooking process, press "⊡" once to pause the cooking.
Press " ⊡ " twice to cancel the cooking.

7. ENERGY-SAVED FUNCTION

1) In waiting state, press "▶" for three seconds, LED display will be off and go into energy-saved mode.

2) If no operation in 20 minutes under waiting state, LED display will be off and go into energy-saved mode.

3) Under the energy-saved mode, press any key or turn coding switch to exit energy-saved mode.

PDF compression, OCR, web optimization using a watermarked evaluation copy of CVISION PDFCompressor

8. SPECIFICATION

(1) The buzzer will sound once when turning the knob at the beginning.

(2) Once the cooking programmer has been set, " ⊙ " is not pressed in 5 minutes. The current time will be displayed. The setting will be cancelled.

(3) The buzzer sounds once by efficient press, inefficient press will be no response.

(4) The buzzer will sound five times to remind you when cooking are finished.

CARE AND CLEANING

OVEN EXTERIOR

Wipe the oven with water and little washing-up liquid. Dry it with a soft cloth.

Caustic or abrasive substances are not suitable. If any such substances come into contact with the frontage; wipe it off immediately with water.

Note	Slight differences in the colors on the appliance front are caused by the use of different materials, such as glass, plastic and metal.
Appliances with stainless steel fronts	Always remove any flecks of lime scale, grease, corn flour and egg white immediately. Corrosion can form under such flecks. Use stainless steel care products. Follow the manufacturer's instructions. Try out the product on a small area first, before using on the whole surface.
Appliances with aluminum fronts	Use a mild windows-cleaning detergent. Wipe the area with a soft windows cloth or a fluff-free micro-fibre cloth, using a horizontal action without applying pressure. Aggressive cleaning products, scratchy sponges and rough cleaning cloths are not suitable.
Warning:	For cleaning, the appliance must be switched off and cooled down. For safety reasons, do not clean the appliance with steam jet or high-pressure recleaning equipment. Aggressive cleaning products, scratchy sponges and rough cleaning cloths are not suitable.

Important: Do not use any abrasive cleaners, sharp scrapers or abrasive items.

PDF compression, OCR, web optimization using a watermarked evaluation copy of CVISION PDFCompressor

OVEN DOOR CLEANING

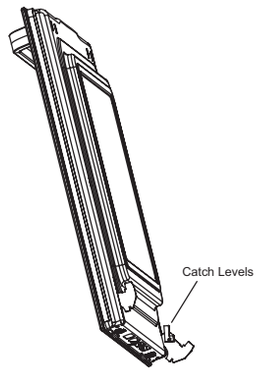

Removing the oven door

1. Pull the oven door to the horizontal level.
2. Move the catch levels of hinges on both sides to the fully open position.
3. Hold the door up to 60 degree, grasp the door with both hands and lift it out of the hinges toward you.

There is a risk of injury if you do reach into the hinge when pulling out the door.

Installing the oven door

1. Set the hinges into their respective holes on both sides, and swing the oven door downward. The step of hinges will be revealed if the oven door is in right position.
2. Close the catch levels on the hinges.
3. Close the oven door.

CATALYTIC SELF- CLEANING (Not all the model has this function)

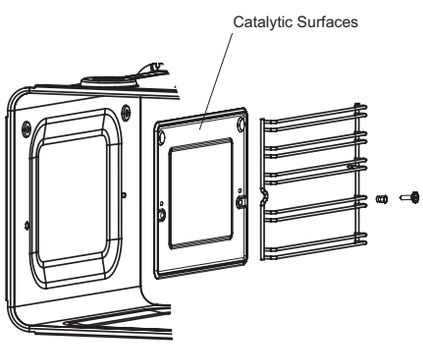

The side walls of oven are coated with self-cleaning enamel. The surface cleans itself while the oven is working.
We recommend heating the oven without any food at regular intervals to complete the self-cleaning process.

1. Remove all side-in items from the oven.
2. Using warm water and washing up liquid to clean the oven floor and dry it.
3. Use the conventional heat functions ( ) . Set the oven temperature to 250˚C.switch the oven off after 45 minute.
4. Wiping off any remaining soiling with a soft damp sponge when the oven has cooled.

IMPORTANT: Do not use oven cleaner on catalytic surface of oven, it can damage the catalytic surface.

It will not affect the surface self-cleaning properties while the enamel become discolour slightly.

REPLACING THE INTERIOR LIGHT

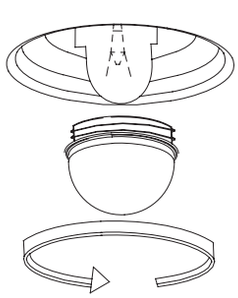

Switch off the mains power supply to replace the interior light, switch off the mains power supply and unscrew bulb. Replace with an identical bulb (230-240V~ 25W) that can withstand very high temperatures.

PDF compression, OCR, web optimization using a watermarked evaluation copy of CVISION PDFCompressor

ACCESSORIES

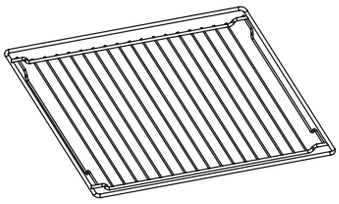

Wire shelves

Insert for grill pan, dishes, cake tins or items for roasting and grilling.

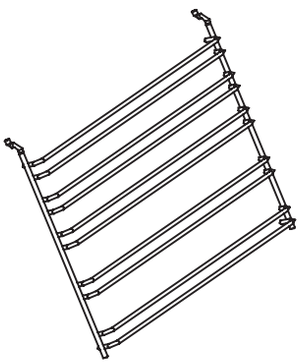

Slider bracket

The shelf support rails on the left and right hand sides of the oven can be removed for cleaning the side walls.

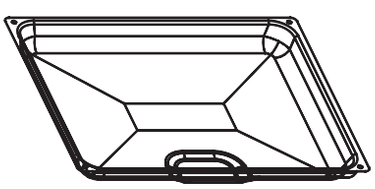

Universal pan

For cooking large quantities of food such as moist cakes, pastries, frozen food etc, or for collecting fat/meat juices.

NOTE: The quantity of accessories refer to the oven you received actually.

PDF compression, OCR, web optimization using a watermarked evaluation copy of CVISION PDFCompressor

INSTALLATION

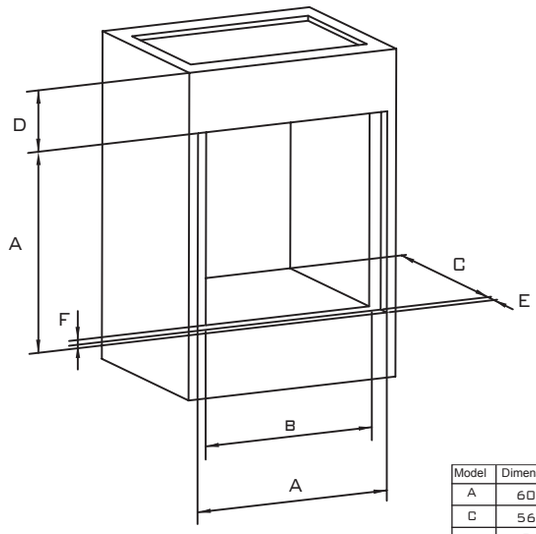

Model	Dimension(mm)	Model	Dimension(mm)
A	600+2	B	565+2
C	560+2	D	90
E	24 +2	F	5
G	25 +2		

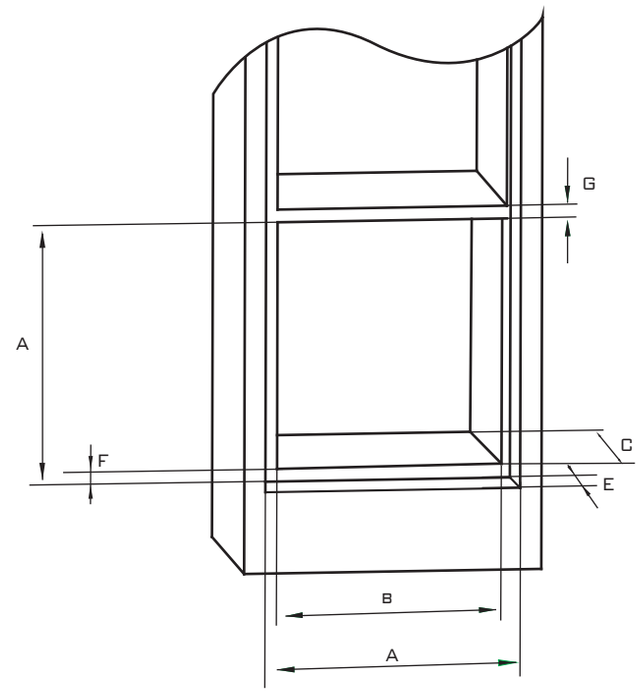

VENTILATING OPENINGS

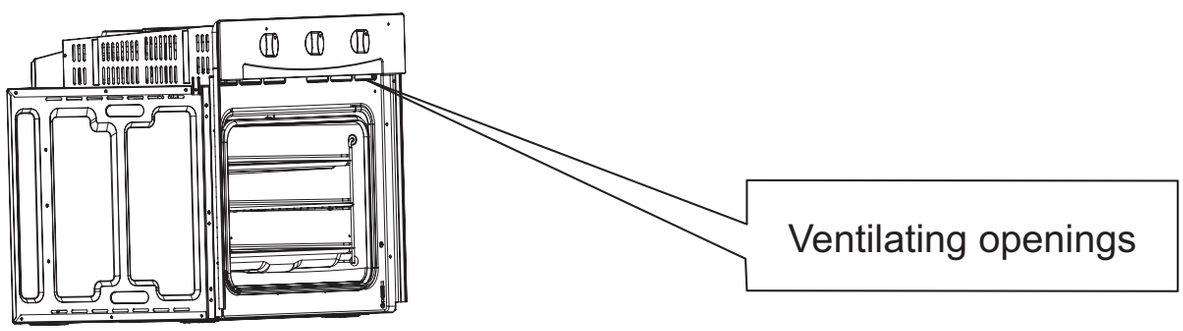

Note: the ventilating opening will coninue working for 15 minutes after the oven stops cooking.

CONNECTIONS OF THE OVEN

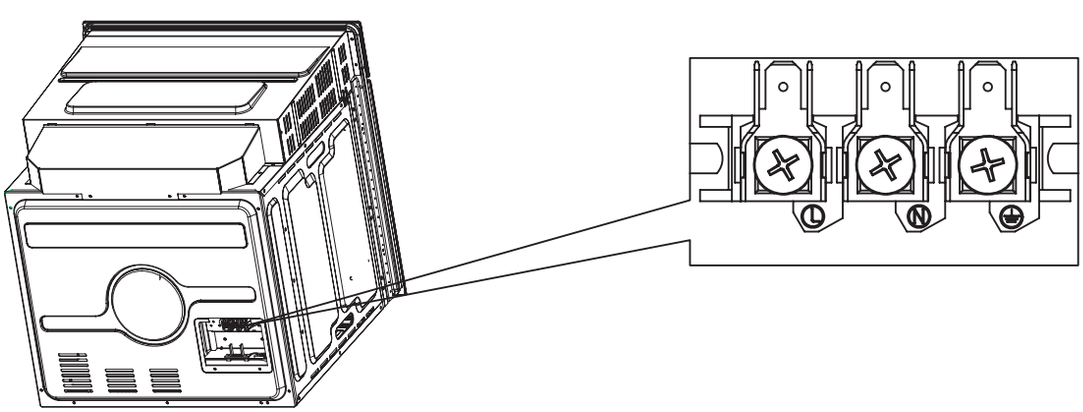

PDF compression, OCR, web optimization using a watermarked evaluation copy of CVISION PDFCompressor

TABLES AND TIPS

Food	Shelf Position	Cooking Method	Temp.°C	Time(Min.)
Small cakes	3		160	20 - 30
Sponge cake	2		160	25 - 35
Apple pie	2		190	50 - 70
Apple pie	1+3		190	50 - 70
Small cakes	3		160	20 - 30
Small cakes	1+3		160	20 - 30
Bread(pieces) *	4		240	1 - 3
Burgers **	4		240	10 - 20 7 - 17

* preheat 10 min. ** preheat 5 min. , 1st side:10-20 min. , 2nd side:7-17 min.

Referring to EN 60350

TABLES AND TIPS

Food	Weight	Shelf Position	Cooking Method	Temp.°C	Time 1st side (min.)	Time 2nd side (min.)	Dish
Rich biscuits	- - - -	3		180	15 - 25	- - - -	Baking tray
Victoria sandwich	- - - -	2		170	23 - 35	- - - -	Baking tray
Swiss Roll	- - - -	3		200	10 - 18	- - - -	Baking tray

PDF compression, OCR, web optimization using a watermarked evaluation copy of CVISION PDFCompressor

TABLES AND TIPS

Food	Weight	Shelf Position	Cooking Method	Temp.°C	Time 1st side (min.)	Time 2nd side (min.)	Dish
Biscuits	- - - -	1+3		180	15 -30	- - - -	Baking tray
Sausages	400g	4		240	5 - 10	3 - 6	Wire shelves
Toast	4 pieces	4		240	4 - 7	- - - -	Wire shelves
Toast	9 pieces	4		240	4 - 7	- - - -	Wire shelves
Beef	1000g	2		210	10 - 20	5 - 15	Wire shelves*
pork	1000g	2		190	19 - 29	11 - 21	Wire shelves*
chicken	1300g	2		180	35 - 45	15 - 25	On ceramic plates +Wire shelves
burgers	1000g	4		240	10 - 20	5 - 10	Wire shelves*
pork fillet	1000g	4		240	15 - 25	10 - 20	Wire shelves*
sausages	400g	4		240	4 - 8	3 - 5	Wire shelves
filet of beef	1000g	4		240	10 - 20	5 - 15	Wire shelves*

* Insert the universal pan at level 1

CUSTOMER CARE TEL:0415195309

PDF compression, OCR, web optimization using a watermarked evaluation copy of CVISION PDFCompressor

Customer Care: customercare@hartmannappliances.com.au

PDF compression, OCR, web optimization using a watermarked evaluation copy of CVISION PDFCompressor